ATTENTION:
Make sure, that the finished choke does not exceed an overall height of 31.5mm from the base plate bottom to the top coil.

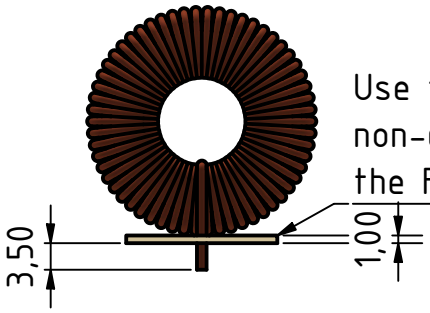


Use temperature-resistant and non-conductive glue to secure the FR4 plate.

Baseplate detail

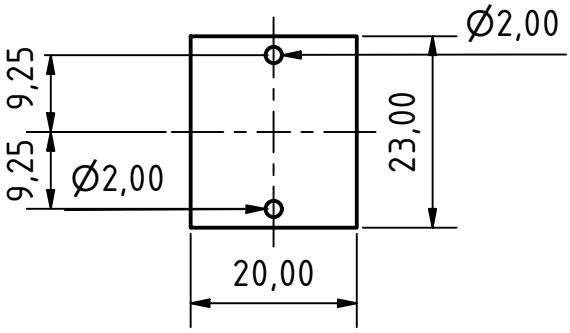


| MG100001621 PFC | | |
|---|---|---|
| Core Specification | Wire Specification | Base plate specification |
| ChangSung | 1.5mm Diameter | FR4 |
| CH270060GT14 | Isolation coating | 21x20x1mm |

Common mode Inductance: 181.984µH± 8%

| | Datum | Name |
|---|---|---|
| Gezeichnet | 11.03.2026 | Wernegger |
| Kontrolliert | 21.09.2023 | |
| Norm | | |

Winding: Single Wire 44 Turns

MG100001621 PFC

1

A4

| Status | Änderungen | Datum | Name |
|---|---|---|---|

| Wiring Instructions | | | | | |
|---|---|---|---|---|---|
| Wind | Wire | Nr. of turns | Pin output | Nr. of layers | Notes |
| N1 | Copper wire | 44 | 1-2 | 1 | |

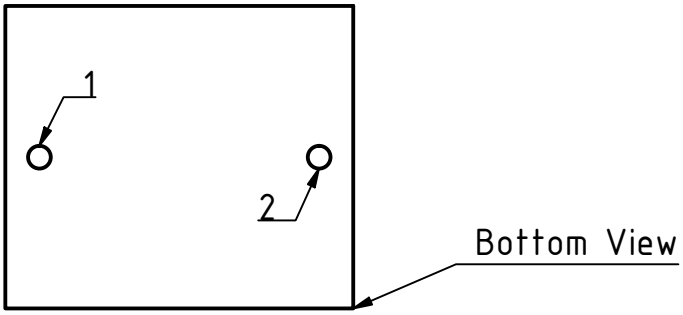


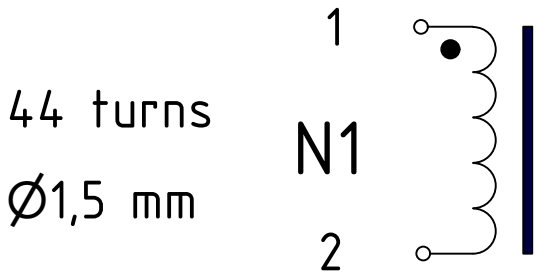


| MG100001621 PFC | | | |
|---|---|---|---|
| No. | Test | Test condition | Limits |
| 1 | Inductance | Pin 1-2 | 167.425-196.542uH |
| 2 | Turns ratio | | |
| 3 | Dielectric strength | | |

| | Datum | Name |
|---|---|---|
| Gezeichnet | 11.03.2026 | Wernegger |
| Kontrolliert | 21.09.2023 | |
| Norm | | |

# Electrical Diagram

MG100001621 PFC

2

A4

| Status | Änderungen | Datum | Name |
|---|---|---|---|

# Winding scheme

Start points
Stop points

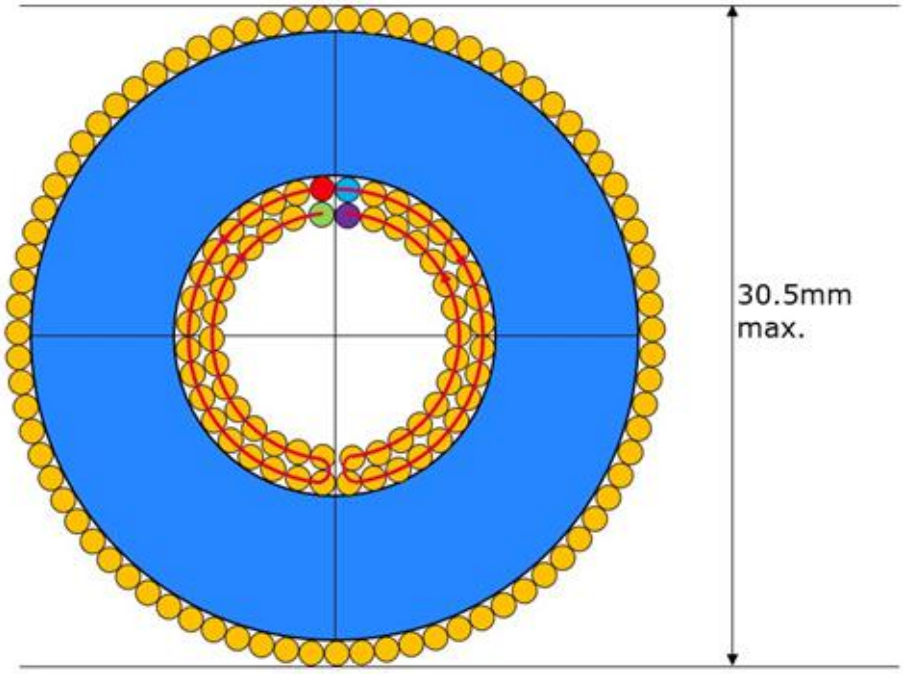


| | | | | | | |
|---|---|---|---|---|---|---|
| | | | | | Datum | Name |
| | | | | Gezeichnet | 11.03.2026 | Wernegger |
| | | | | Kontrolliert | 21.09.2023 | |
| | | | | Norm | | |
| Status | Änderungen | Datum | Name | | | |

# Winding Scheme

MG100001621 PFC

3

A4